25mm Parallel Battery Link - Negative

Product Code: **FSBL25NP**
Barcode: **6002844076306**

- Length: 0.35m
- Use with 12V/750W
  24V/1500W
  48V/3000W (Ellies 3000 watt MP inverter.)

25mm Parallel Battery Link - Negative

25mm² cable to connect batteries in parallel.

Diagram

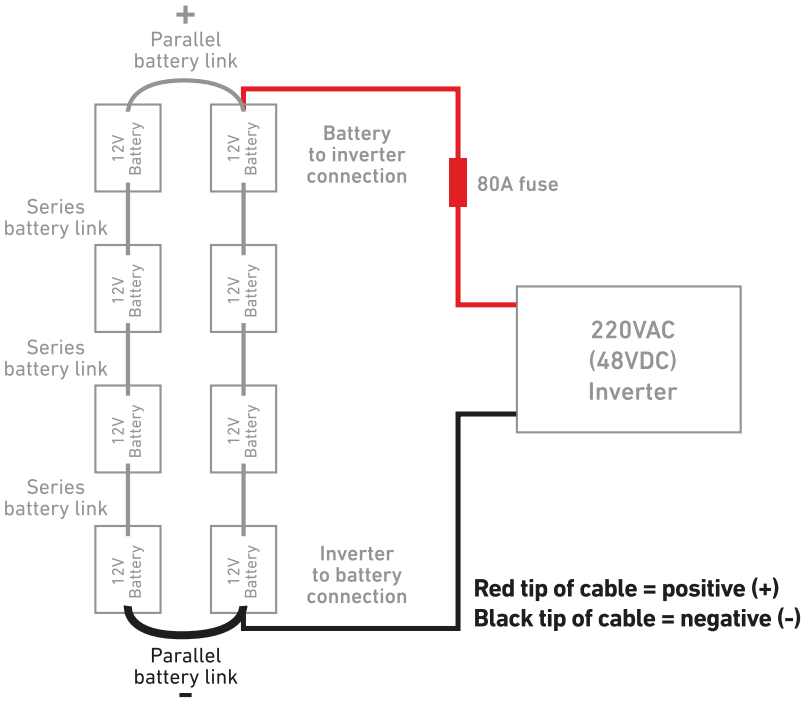

PACKAGE DIMENSIONS

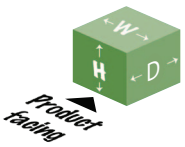

Height (mm)	Depth (mm)	Width (mm)	Weight (kg)
230	180	45	0.17

THE PACKAGE CONTAINS

1 x 25mm Parallel Battery Link - Negative